MOTIONGREY

Motion Enforcer Pro Gaming Chair - Assembly Instruction

Scan to access the step-by-step installation instructions and video.

PARTS ACCESSORIES

A

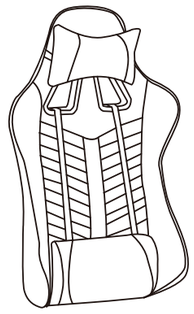

Backrest **x1**

B

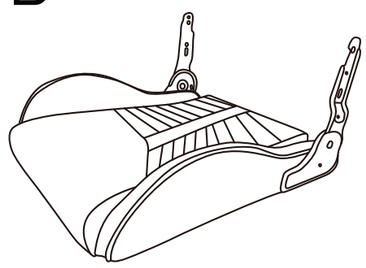

Seat Base **x1**

C

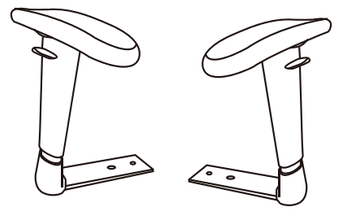

Armrest **x2**

D

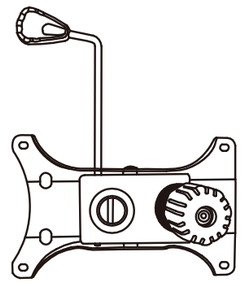

Mechanism **x1**

E

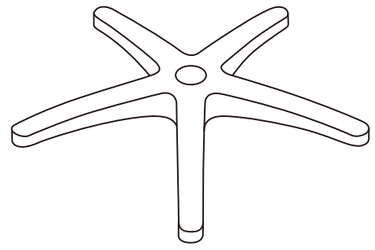

Starbase **x1**

F

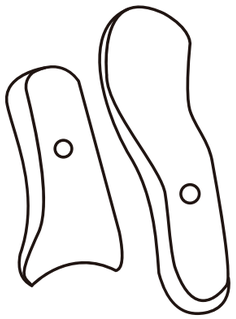

Recliner Cover **x2**

G



Gas Lift **x1**

H



3 Cups Cover x1

I

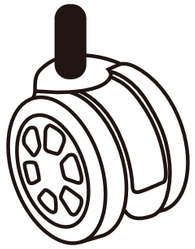

Castor **x5**

SCREW ACCESSORIES

S1

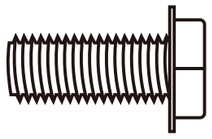

M8*20mm **x12**

S2

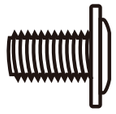

M5*8mm **x2**

S3



Allen Key **x1**

STEP 1

Insert all five castors into the starbase holes.

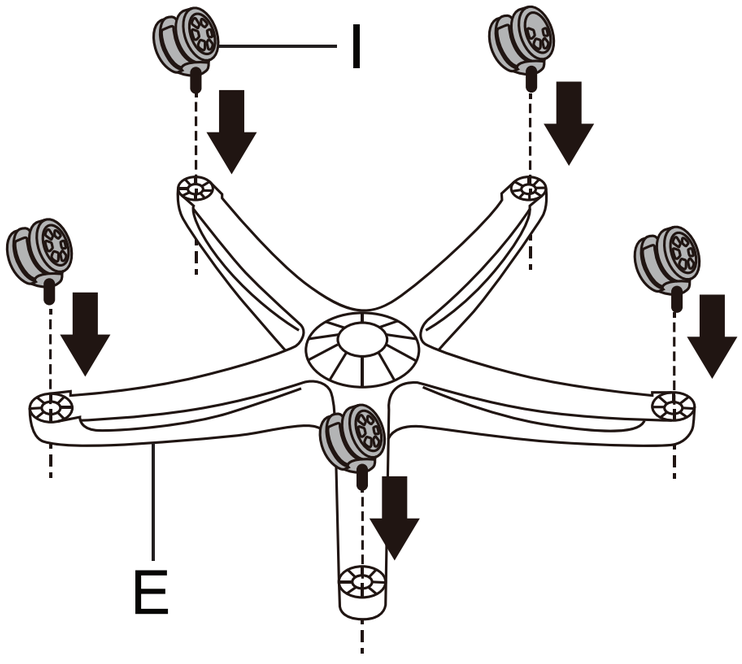

STEP 2

Insert the gas lift into the center of the starbase, then slide the 3 cups cover over it.

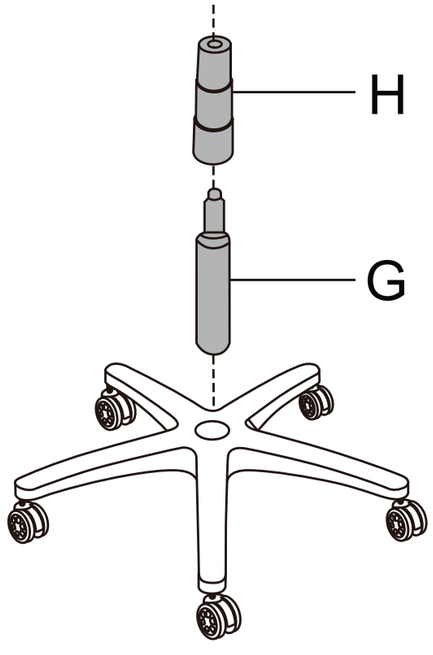

STEP 3

Attach the backrest to the seat base. Tighten securely with the Allen key.

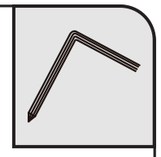

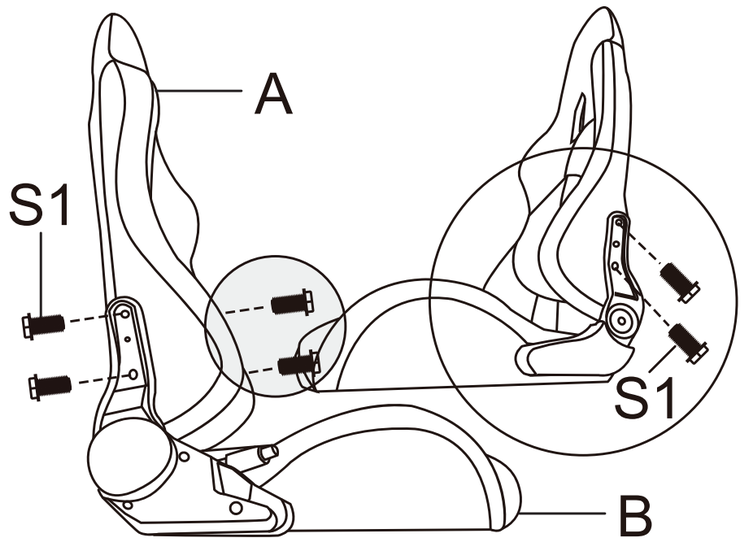

STEP 4

Install the recliner covers on both sides of the seat. Tighten securely with the Allen key.



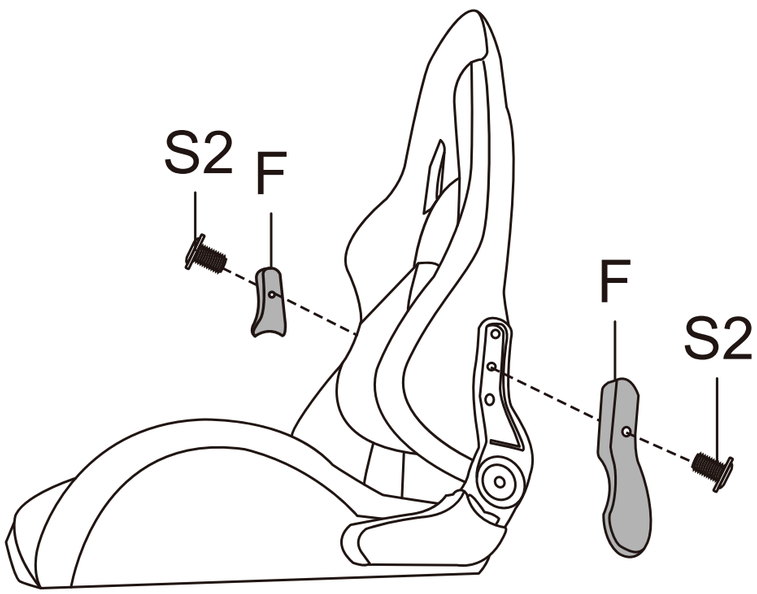

STEP 5

Flip the seat upside down. Attach both armrests and the mechanism. Tighten securely with the Allen key.

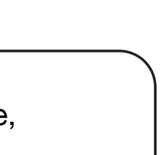

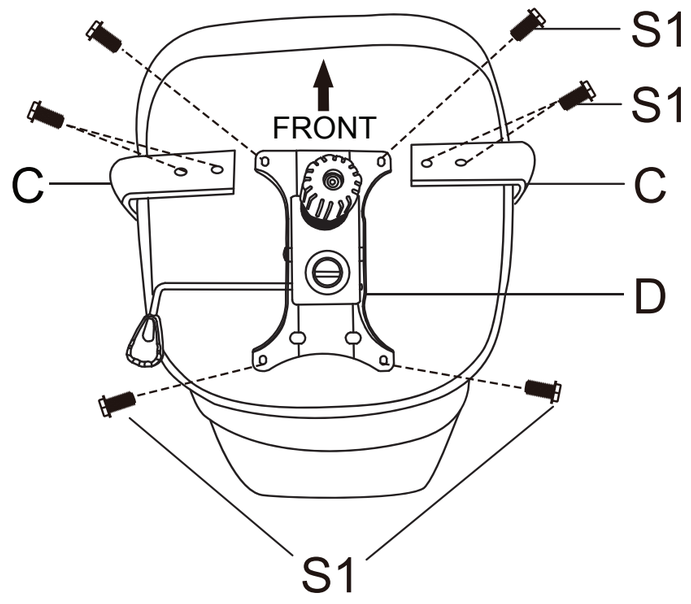

STEP 6

Place the assembled seat onto the gas lift and press down firmly to lock it in place.

